UTTERMOST

ASSEMBLY INSTRUCTION FOR ITEM # 51150

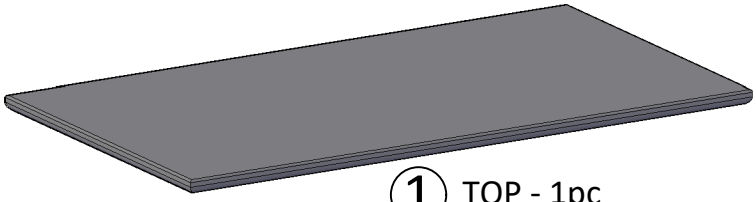

① TOP - 1pc

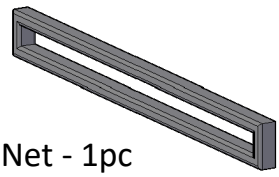

② Net - 1pc

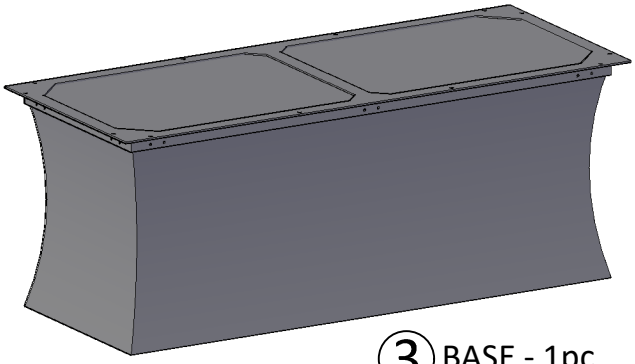

③ BASE - 1pc

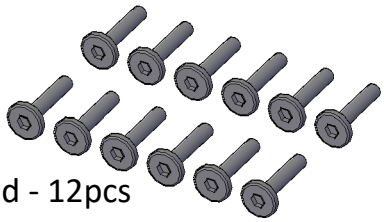

Ⓐ Bold - 12pcs

Ⓑ Spring Washer - 12pcs

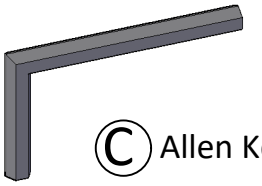

Ⓒ Allen Key - 1pc

1

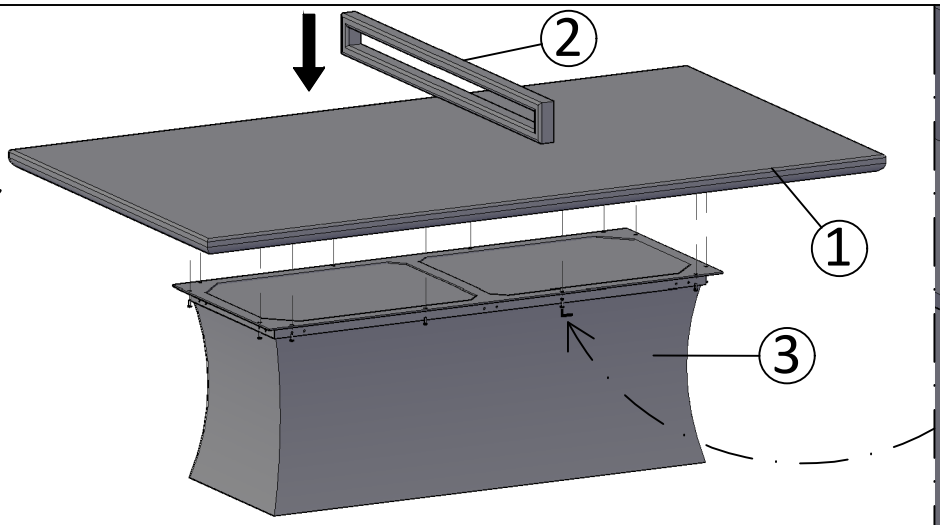

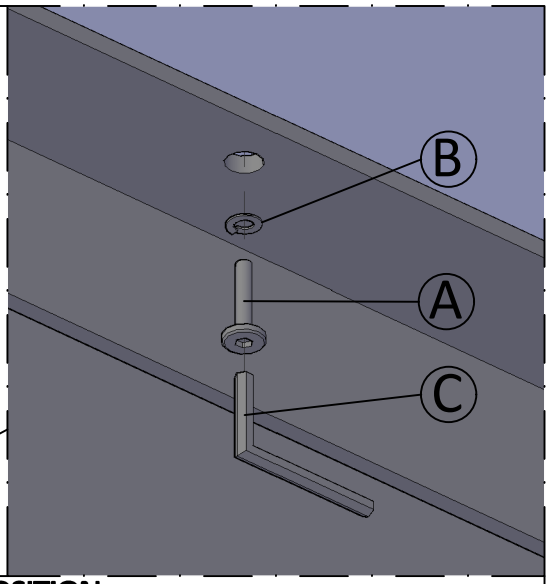

NOTE: THIS ITEM IS VERY HEAVY DO NOT TURN IT UPSIDE DOWN

2 **DO NOT TIGHTEN THE BOLT BEFORE THE LEG IS IN THE CORRECT POSITION**

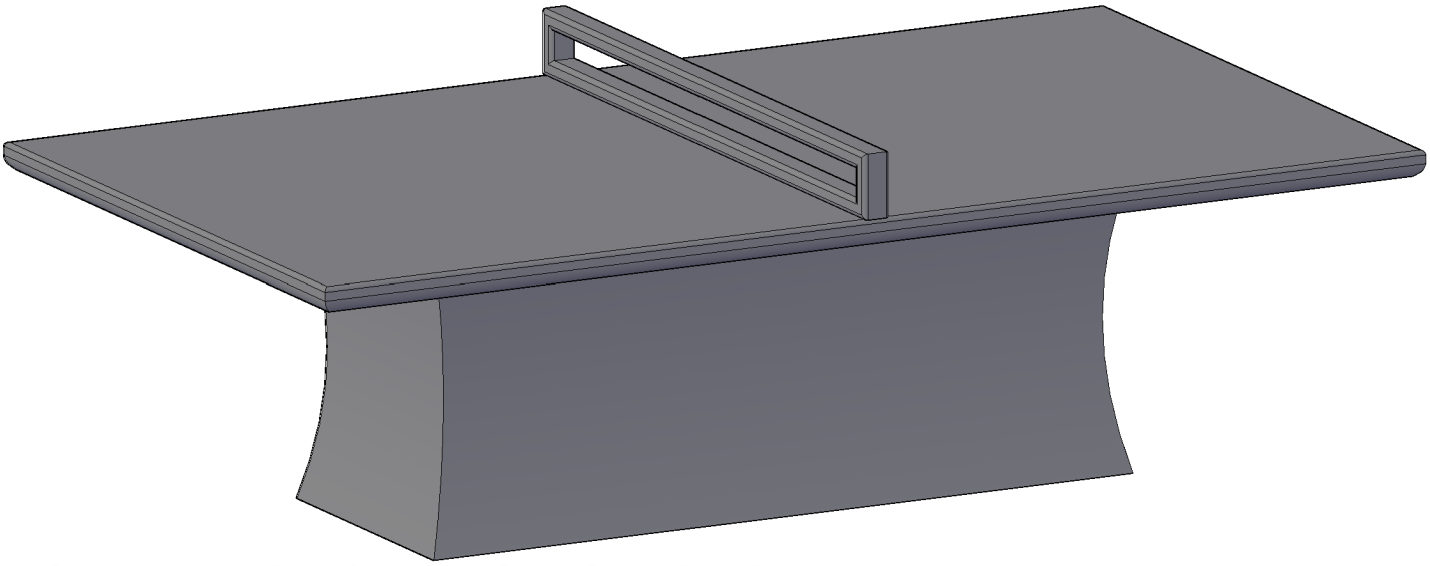

NOTE: SEPARATE THE TOP FROM THE BASE BEFORE MOVING THE ITEM

P.O. Box 558 | 3325 Grassy Hill Road | Rocky Mount, VA | 24151
www.uttermost.com